GP

GP Autobat Sdn Bhd

# GREATER POWER

Over 30 countries
since 1968

QUALITY SYSTEM
SIRIM
UKAS

A Company Certified to Quality System - MS ISO 9001:2000

# BATTERY SPECIFICATIONS

## » ADVANTAGES of Enveloped Separator

- Greater starting power
- Eliminate short circuit
- Longer battery life
- Low maintenance
- Better vibration resistance

**1) SAFETY VENT PLUGS »**
Specially designed to eliminate acid loss & enhance $O_2$ & $H_2$ recombination in the cell.

**2) CORROSION RESISTANT TERMINAL POST »**
Heavy duty terminal post improves current flow & cranking.

**3) DURABLE POLYPROPYLENE CELL CONTAINER »**
Impact resistant container to house negative & positive cells.

**4) INTERCELL CONNECTORS »**
Spot-welded to increase current flow.

**5) NEGATIVE PLATE »**
Latest computer designed grid provides perfect balance with the positive plate to give maximum performance.

**6) POSITIVE PLATE »**
Latest computer designed grid to enhance optimum utilisation of active materials thereby increasing performance.

**7) PE ENVELOPED SEPARATOR »**
Low electrical resistant PE separator to eliminate internal short-circuit and allow better circulation of electrolyte.

# CONTAINER FEATURES

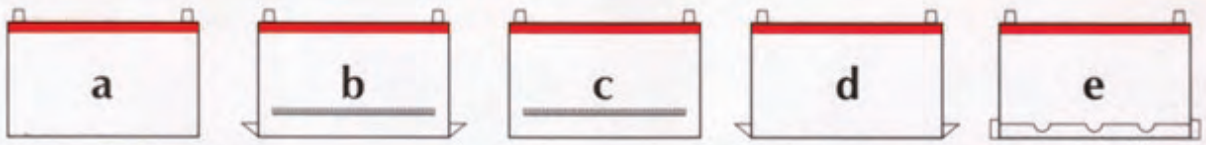


| a | b | c | d | e |
|---|---|---|---|---|
| Plain Side | 19.5mm End sides, 10.5mm sides | 10.5mm sides | End sides | 10.5mm 4 sides Hold Down |

# REPLACEMENT DATA

| MAKE OF CARS | BATTERY MODEL |
|---|---|
| **ALFA ROMEO** | |
| Alfasud 1.3, 1.4, 1.5, Alfa 146,166 | N50Z / DIN 55 |
| 2.0 Salespeed, 2.0/2.5 V6 Sportomatic | DIN 55 / DIN 66 |
| 2.5 V6/3.0 V6 Sportronic | DIN 55 / DIN 66 |
| **AUDI** | |
| A4 1.8/1.8E, Turbo, Avant Auto | |
| A6 2.0/2.4E/2.6/2.8 V6, TT 1.8 Turbo/Quattro/Roadster | DIN 66 |
| A8 3.0/4.2 Multitronic/Quattro Tiptronic | |
| **AUSTIN** | |
| Allegro 1100/1200, Traveller 1300 | DIN 55 |
| Mini 850/100 Clubman, Mini Cooper | DIN 55 |
| **ALPINE** | |
| Alpine Talbot/Chryster | N40 / NS60 |
| **BUFORI** | |
| MK II Soft/Hard Top (Auto/Manual) | DIN 55 |
| **BMW** | |
| 318i, 323i, 325i | DIN 55 |
| 520i, 525i, 528i, 530i, X5 3.0/4.4 | DIN 66 |
| 728i, 730i, 735i/L, 740i/L, 745i/LZ31 | DIN 66 / DIN 75 |
| **CHERY** | |
| A160 | DIN 55 |
| **CHEVROLET** | |
| Aveo 1.5, Optra Sedan 1.6/1.8, Optra5 1.8 | DIN 55 |
| Nabira 1.8/1.8 Sport | DIN 66 |
| Lumina 2.2 Sport/3.8 V6 | 55D23L |
| **CITROEN** | |
| Berlogo 1.4i, CX2500D | DIN 88 |
| Xantia 2.0i, ZX 2.0i, XM 2.0i/3.0i | DIN 55 / DIN 66 |
| Xsara, Evasion 2.0SX | DIN 55 / DIN 66 |
| **DAIHATSU** | |
| Charade CX/CXS/Espri | NS40ZL |
| Charmant, Ascend, Feroza, Voyager | NS60L(ST) |
| Delta Lorry V58 | N100 |
| Delta Lorry V116 | N100Z |
| Delta Lorry S91 | NS40ZL |
| **FERRARI** | |
| F360/360 Modena, F1 Modena, Spider Modena | DIN 66 |
| **FIAT** | |
| Bravo 1.6/1.8 ELX, Bravo 1.8 GT, Marea 1.6/1.8 ELX | DIN 55 |
| Punto 1.4 GT | N50ZL / NS70L |
| Ulysse 20 1E EL/20 TD EX Diesel, Multipla 1.6 ELX | DIN 66 |
| **FORD** | |
| Econovan, Spectron XLT, Transit | NS40ZL / NS60L(ST) |
| Escape 2.0 XLT | NS70L |
| Lynx 1.3/1.6/1.8, Ranger, RS Lynx 2.0 | 55D23L |
| Ranger, Everest 4WD, Hurricane | N70Z / NX120-7 |
| **HONDA** | |
| Accord, Odyssey 2.3 VTec | 55D23L |
| City 1.5, Jazz 1.5 | NS40ZL / NS60L |
| Civic, Prelude (PS), APS, Quintet, CR-V | NS60 |
| Legend 3.2, NSX | NS70L / DIN 66 |
| Stream 2.0, VTec 1.7 | 46B24L / NS60L |
| **HYUNDAI** | |
| Atos, Accent | NS40 / NS40ZL |
| Elantra, Matrix, Santa Fe 2.7, Tucson 2.0 (A) | NS70 |
| Getz 1.3 GL/ 1.6 GL | DIN 55 / 55D23L |
| Sonata 2.0/2.4 (A), Trajet 2.0/2.9, XG250 V6 | DIN 55 / 55D23L |
| **INOKOM** | |
| Lorimas | N100 |
| Permas Window Van | DIN 66 |

| MAKE OF CARS | BATTERY MODEL |
|---|---|
| **ISUZU** | |
| Hicom Perkasa, Trooper V6 (Petrol) | NS70 |
| Trooper Turbo (D), UBS 25/ Gibhorn, UBS69, | N70Z / NX120-7 |
| Amigo, Bighorn UBS 25 Auto/69 Auto, Rodeo, | N70Z / NX120-7 |
| **JAGUAR/DAIMLER** | |
| XJ6, XJR, XJS, Daimler, Sovereign | DIN 66 / DIN 75 |
| XK8 4.2 Coupe/Cabriolet | DIN 66 / DIN 75 |
| **JEEP** | |
| Cherokee | DIN 55 |
| Wrangler | DIN 66 / NS70L |
| **KIA** | |
| Carens | DIN 55 / N70Z |
| Picanto 1.1 (A) | DIN 55 / NS40ZL |
| Sephia 1.5/1.6, Carnival 2.5 | DIN 55 |
| Sorento 2.5/3.5 | NS70L / NX120-7 |
| Sportage 2.0, Rio, Spectra, Optima | DIN 55 |
| **LAND ROVER** | |
| Defender, Discovery, Freelander/V6 | N70-Z |
| Range Rover 2.5/4.0/4.6 | NX120-7 |
| **LOTUS** | |
| Elise/Sport 190, Esprit GT-SE/V8 | DIN 45 |
| **MAZDA** | |
| 323/ BTA9/ BT4H,Premacy 2.0, Tribute SDX, Mazda6 2.0 | 55D23L |
| 626, 929, GW33/38/85 | N50ZL / NS70L |
| E100 W/VAN | NS60L |
| E2500 W/VAN | NS60L(ST) |
| Fighter Arista 2.5L/Fighter 4x4 | NX120-7 |
| Lantis, MX-5, MPV | 55D23L |
| **MERCEDES BENZ** | |
| C200, C220, C230K, E200K, E240, A160 | DIN 66 |
| C220 CDI, CLK240, ML270 EDI, E270 Avantgarde | DIN 66 |
| **S Series** | |
| C180K, C200K, CLK200K, CLK270 CDI, | DIN 100 |
| C200K Avantgarde | |
| **MITSUBISHI** | |
| Cordia GLS, Tredia GLS, Sigma, Celeste | NS60L |
| Pajero (V6 Petrol/Turbo-Diesel), Airtrek 4WD, Storm 3.0 | N70Z / NX120-7 |
| **NAZA** | |
| Citra 2.0 | DIN 55 |
| Ria 2.5 V6 | NS70L |
| Toyota ISIS (Platana) | 46B24R / NS60 |
| Toyota Wish | NS40Z |
| **NISSAN** | |
| AD Resort, Cefiro, Terrano, Sentra, Serena 1.6 | NS70L |
| C22 Vanette | N40 |
| CMF 88 (D) | N50ZL |
| Frontier | 95D31R / NX120-7 |
| X-Trail | 55D23L |
| **MORRIS** | |
| 1275GT, Clubman, Mini 1000 | N50Z / DIN 55 |
| **PERODUA** | |
| Kancil, Kelisa, Kembara, Kenari, Rusa | NS40ZL |
| **PROTON** | |
| Arena, Iswara, Perdana V6, Putra, Saga, Wira | NS60 / NS70 |
| Gen 2 | DIN 55L |
| Juara | NS40ZL / NS60L |
| Satria, Waja | NS60L |
| Tiara | DIN 55 |

| MAKE OF CARS | BATTERY MODEL |
|---|---|
| **PEUGEOT** | |
| 306, 405SR, 505SR | DIN 55 |
| 404D, 405D, 406, 504D/GL, 505i, 604, 607 (3.0), 807 (2.0) | DIN 66 / NS70 |
| **PORSCHE** | |
| 911 Carrera/ Targa Turbo | DIN 55 |
| 920, 924, 928, 944 | DIN 66 |
| **ROLLS-ROYCE** | |
| Phantom, Silver Cloud, Silver Shadow | N70Z / NX120-7 |
| **ROVER** | |
| 216 Cabriolet, 220 Turbo Coupe, 620, 623, 820, 827 | DIN 66 |
| **RENAULT** | |
| R9, R11, R18, R20, R21, R25, R30 (D), 19RT | DIN 66 / NS70 |
| Espace, Kangoo, Scenic | DIN 55 / DIN 66 |
| **SAAB** | |
| 900GLS, GLE, GLi, 9-3 Turbo, 9-5 | DIN 55 |
| **SUBARU** | |
| Forester | 55D23L |
| Impreza 1.6 TS Auto, Impreza WRX 2.0 Turbo | DIN 55 |

| MAKE OF CARS | BATTERY MODEL |
|---|---|
| **SUZUKI** | |
| Vitara, Grand Vitara, Swift SF 310GL | NS60 |
| **SSANGYONG** | |
| Chairman, Rexton | N70Z / N70 |
| **TOYOTA** | |
| Altis 1.6/1.8 , Avanza, Vios | NS40ZL / NS60L |
| Camry 2.2/2.4, V6, Estima 2.4, Fortuner | 55D23L |
| Harrier 2.2, Ipsum | NS60L |
| Hiace, Hilux/SR Turbo | NX120-7 / N70Z |
| Lexus LS400 | N70Z / NX120-7 |
| Prado 3.0 Turbo (D), Prado 2.7 (Petrol) | N70Z |
| Unser | N50Z / NS70 |
| **VOLKSWAGEN** | |
| Bora 1.6, Golf GT1, Santana GX5 | DIN 66 |
| Passat 1.8 20v Turbo, New/Old Beetle | DIN 66 |
| **VOLVO** | |
| 240GL, 244DL | N50Z / NS70 |
| 740/760GLE, S40, V40, S60, C70 | DIN 66 / NS70 |
| 940 GL, 940 Turbo, 850 GLT, S70 | DIN66 |
| S60, S40 | DIN 75 |
| V70, S80T6, XC90 | DIN100 |

*Disclaimer: Information is correct at time of printing.*

# TERMINAL TYPE

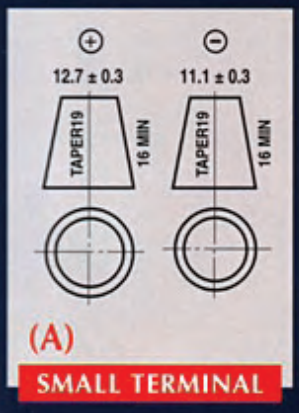


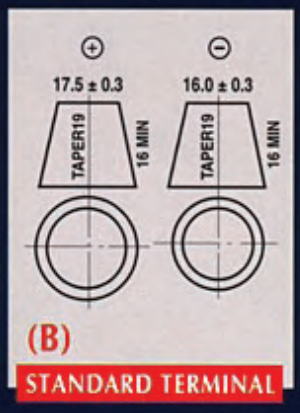


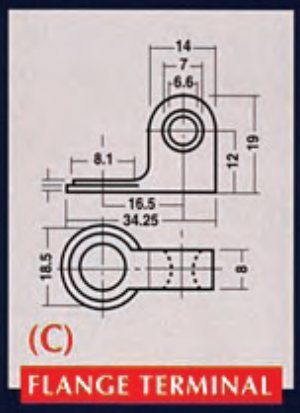


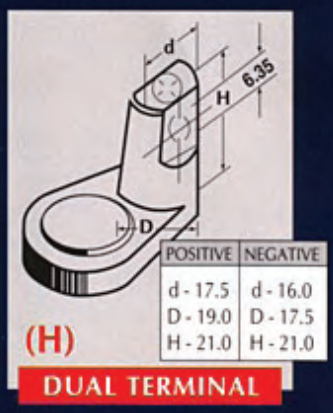


| POSITIVE | NEGATIVE |
|---|---|
| d - 17.5 | d - 16.0 |
| D - 19.0 | D - 17.5 |
| H - 21.0 | H - 21.0 |

# CELL LAYOUT

# BATTERY SPECIFICATIONS

| BATTERY | | | 20 HR Capacity | Dimension (MM) | | | | Dry Weight | Acid Vol. | CCA @-18°C | Reserve Capacity | Charging Current | Cell Layout | Terminal Type | Container Feature |
|---|---|---|---|---|---|---|---|---|---|---|---|---|---|---|---|
| Old JIS Type | New JIS Type | European Type | (AH) | L | W | H | TH | (KG) | (L) | (Amp) | (mins) | (Amp) | | | |
| 12N24-3/4 | 26A19R/L | 26A19R/L | 26 | 186 | 125 | 160 | 175 | 6.8 | 2.1 | 220 | 35 | 2.5 | 1/2 | H | a |
| NS40/H/L | 32B20R/L | 53522/20 | 32 | 196 | 127 | 201 | 223 | 7.0 | 2.4 | 230 | 45 | 3.0 | 1/2 | A/H | a |
| NS40Z/H/L | 36B20R/L | 53621/38 | 35 | 196 | 127 | 201 | 223 | 8.2 | 2.2 | 280 | 52 | 3.0 | 1/2 | A/H | a |
| N40/L | 32C24R/L | 54037/38 | 40 | 238 | 135 | 203 | 225 | 7.4 | 3.3 | 240 | 57 | 3.0 | 1/2 | B | a |
| N45/H/L | 44B20R/L | 54046/45 | 40 | 236 | 136 | 178 | 200 | 7.4 | 3.3 | 240 | 57 | 3.0 | 1/2 | B/H | d |
| N45Z/H/L | 36C24R/L | | 45 | 236 | 136 | 178 | 200 | 8.7 | 3.0 | 280 | 65 | 3.5 | 1/2 | B/H | d |
| NS60STD/L | 46B24R/L | 54551/84 | 43 | 238 | 129 | 201 | 223 | 8.6 | 3.1 | 280 | 60 | 3.5 | 1/2 | B | a |
| NS60/L | 46B24R/L | 54551/84 | 45 | 238 | 129 | 201 | 223 | 9.8 | 2.8 | 330 | 65 | 3.5 | 1/2 | B | a |
| N50/L | 48D26R/L | 55030/31 | 50 | 257 | 172 | 202/207 | 225 | 10.0 | 4.6 | 310 | 77 | 3.5 | 1/2 | B | b |
| N50Z/L | 60D26R/L | 56049/48 | 60 | 257 | 172 | 202/207 | 225 | 11.6 | 4.2 | 375 | 90 | 4.0 | 1/2 | B | b |
| N65/H/L | 55D23R/L | | 60 | 235 | 173 | 190 | 209 | 11.4 | 4.2 | 310 | 77 | 3.5 | 1/2 | B/H | b |
| N65Z/H/L | 60D23R/L | 56069/68 | 60 | 235 | 173 | 190 | 209 | 12.2 | 4.0 | 375 | 90 | 4.0 | 1/2 | B/H | b |
| NS70/L* | 65D26R/L | 56517/18 | 65 | 257 | 172 | 200 | 202/225 | 13.0 | 4.0 | 500 | 113 | 6.0 | 1/2 | B | b |
| N70/L | 70D31R/L | 57024/29 | 70 | 304 | 173 | 204 | 202/225 | 13.7 | 5.0 | 520 | 120 | 6.0 | 1/2 | B | a |
| N70Z/L | 75D31R/L | 57513/12 | 75 | 304 | 173 | 204 | 225 | 15.4 | 4.8 | 600 | 137 | 7.0 | 1/2 | B | a |
| NX120-7/L | 95D31R/L | 58514 | 80 | 304 | 173 | 204 | 225 | 16.2 | 4.8 | 600 | 150 | 7.0 | 1/2 | B | a |
| 4WD/L | 105D31R/L | | 80 | 304 | 173 | 204 | 225 | 16.2 | 4.8 | 600 | 150 | 7.6 | 1/2 | B | a |
| N95/L | CV15 | | 95 | 344 | 173 | 211 | 234 | 16.4 | 6.5 | 600 | 137 | 7.0 | 1/2 | B | a |
| N95Z/L | CV17 | | 100 | 344 | 173 | 211 | 234 | 17.7 | 6.0 | 680 | 147 | 8.0 | 1/2 | B | a |
| N100/L | 95E41R/L | 61018/16 | 100 | 406 | 174 | 210 | 234 | 17.8 | 7.2 | 680 | 150 | 8.0 | 1/2 | B | a |
| N100Z/L | 105E41R/L | | 110 | 406 | 174 | 210 | 234 | 19.3 | 6.2 | 680 | 167 | 8.0 | 1/2 | B | a |
| N120** | 115F51 | 62033 | 120 | 499 | 180 | 216 | 257 | 22.8 | 10.8 | 720 | 215 | 10.0 | 3 | B | a |
| N150 | 145G51 | 63588 | 150 | 505 | 220 | 213 | 242 | 27.0 | 12.9 | 850 | 280 | 15.0 | 3 | B | a |
| N200 | 190H52 | 70029 | 200 | 516 | 274 | 218 | 242 | 30.6 | 15.2 | 1150 | 310 | 20.0 | 3 | B | a |
| DIN36 | | 53621 | 36 | 207 | 175 | 175 | 175 | 8.8 | 2.4 | 230 | 60 | 3.0 | 2 | B/C | e |
| DIN44 | | 54434 | 44 | 207 | 175 | 190 | 190 | 9.2 | 2.6 | 230 | 60 | 3.0 | 2 | B/C | e |
| DIN45 | | 54533 | 45 | 242 | 175 | 175 | 175 | 10.2 | 3.4 | 300 | 65 | 3.5 | 2 | B/C | e |
| DIN55* | | 55530/31 | 55 | 242 | 175 | 175/190 | 175/190 | 10.2 | 3.4 | 300 | 65 | 3.5 | 2 | B/C | e |
| DIN54/63 | | 56318 | 63 | 277 | 175 | 175 | 175 | 12.0 | 4.2 | 380 | 80 | 4.0 | 2 | B/C | e |
| DIN66* | | 56618/19 | 66 | 277 | 175 | 175/190 | 175/190 | 12.0 | 4.2 | 380 | 80 | 4.0 | 2 | B/C | e |
| DIN75 | | 57512 | 75 | 304 | 175 | 175 | 190 | 13.8 | 5.4 | 430 | 105 | 4.0 | 2 | B/C | e |
| DIN85 | | 58515 | 85 | 350 | 175 | 175 | 175 | 15.8 | 5.8 | 520 | 115 | 7.0 | 2 | B | e |
| DIN88 | | 58815 | 88 | 350 | 175 | 190 | 190 | 16.0 | 6.0 | 520 | 115 | 7.0 | 2 | B | e |
| DIN100 | | 60038 | 100 | 350 | 175 | 190 | 190 | 17.4 | 5.6 | 580 | 130 | 7.0 | 2 | B | e |
| DIN A | | 62034 | 120 | 511 | 189 | 193 | 219 | 24.2 | 9.5 | 720 | 160 | 10.0 | 4 | B | a |
| DIN B | | 64327 | 135 | 508 | 218 | 186 | 215 | 26.0 | 10.3 | 850 | 200 | 15.0 | 4 | B | a |
| DIN C | | 68021 | 200 | 511 | 270 | 220 | 243 | 29.7 | 14.9 | 1020 | 230 | 28.0 | 4 | B | a |
| N26-6V | | 3531 | 190 | 304 | 173 | 204 | 225 | 16.2 | 6.2 | 1050 | 285 | 20.0 | 6 | B | a |
| NA125 | | 62523 | 125 | 284 | 268 | 208 | 232 | 29.5 | 8.4 | 1050 | 250 | 10.0 | 5 | B | a |

* Low version available on request

** String handle available on request

**Recommended Acid Filling (SG)**

Tropical @ >27°C 1.24

Temperate @ <20°C 1.28

# THE COMPANY

GP Autobat Sdn Bhd is the leading manufacturer with more than 35 years of manufacturing experience in the automotive battery industry. Our comprehensive product lines of superior quality include both the Japanese & European models. With continuous upgrading of its machinery, our plant is reputed to be equipped with one of the most modern and sophisticated technology & equipment in Malaysia capable of producing more than 1 million batteries per annum.

The attainment of the prestigious International Certificate Quality Award in March 1993 has given all our customers an added confidence in our products. We always recognise that quality is a powerful means of gaining an edge over our competitors, and we will always strive towards excellence in producing quality products which meet the needs and expectations of our customers.

We have a simple policy that is to deal with our customers with uncompromising honesty, integrity and for mutual financial benefits. Our goals are driven by the simple truth that our success depends on your success.

## OUR BATTERIES

**GP Autobat Sdn. Bhd.** (120646-K)
Lot 5031 & 5032, Jalan Teratai, Off Jalan Meru, 41050 Klang, Selangor Darul Ehsan, Malaysia.
Tel: 03-3392 7180 (Hunting Line) Fax: 03-3392 7237 (General) Fax: 03-3392 9397 (Marketing)
E-mail: gpah@streamyx.com (General) E-mail: gpmkt@hotmail.com (Marketing)
Website: www.gp-products.com

QUALITY SYSTEM SIRIM UKAS

MS ISO 9001:2000